DocuSign Envelope ID: 5E0122B4-0F9C-4453-8F6C-D2890B762C3F

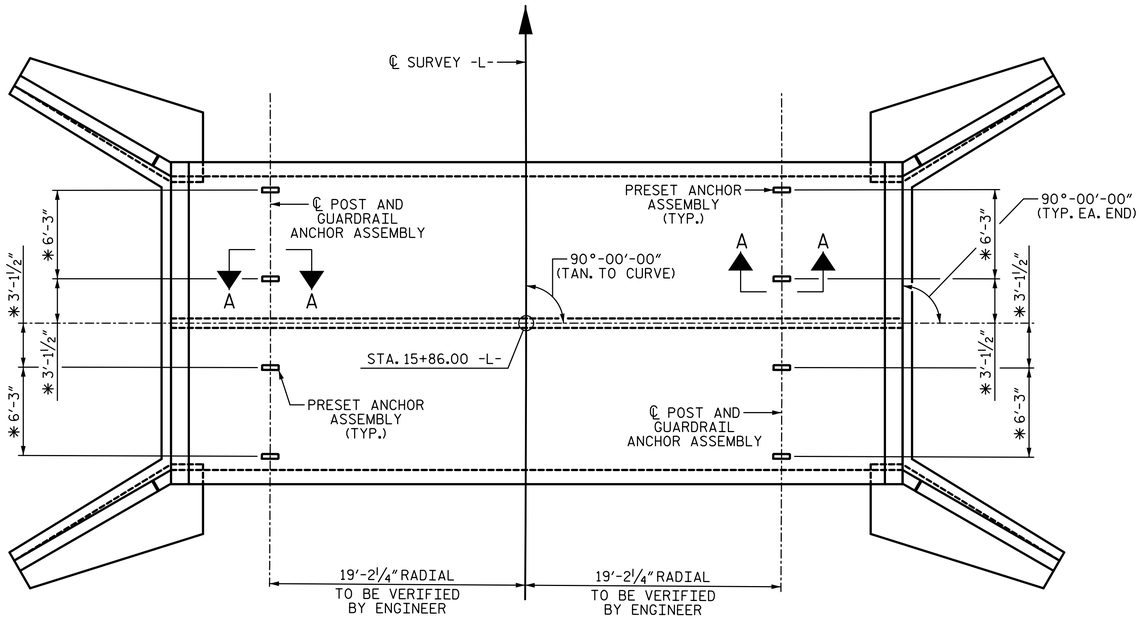

PLAN

✱ DIMENSION ALONG ARC

(SHOWING GUARDRAIL ANHOR ASSEMBLY SPACING)

NOTES:

THE GUARDRAIL ANCHOR ASSEMBLY FOR CULVERTS SHALL CONSIST OF THE FOLLOWING COMPONENTS :

A. FERRULES SHALL BE MADE FROM STEEL MEETING THE REQUIREMENTS OF AASHTO M169, GRADE 12L14 AND SHALL HAVE A MINIMUM LENGTH OF THREADS OF 2½″.

B. 4 - 1″ Ø X 2 ¼″ BOLTS WITH WASHERS, BOLTS SHALL CONFORM TO THE REQUIREMENTS OF ASTM A307. BOLTS AND WASHERS SHALL BE GALVANIZED. (AT THE CONTRACTOR'S OPTION, STAINLESS STEEL BOLTS AND WASHERS MAY BE USED AS AN ALTERNATE FOR THE 1″ Ø X 2¼″ GALVANIZED BOLTS AND WASHERS. THEY SHALL CONFORM TO OR EXCEED THE MECHANICAL REQUIREMENTS OF ASTM A307. THE USE OF THIS ALTERNATE SHALL BE APPROVED BY THE ENGINEER.)

C. WIRE STRUTS SHOWN IN THE GUARDRAIL ANCHOR ASSEMBLY FOR CULVERTS DETAIL ARE MINIMUM ALLOWABLE SIZE AND SHALL HAVE A MINIMUM TENSILE STRENGTH OF 100,000 P.S.I. AS AN OPTION, A 7/16″ Ø WIRE STRUT WITH A MINIMUM TENSILE STRENGTH OF 90,000 PSI IS ACCEPTABLE.

GUARDRAIL ANCHOR ASSEMBLY WITH BOLTS SHALL BE ASSEMBLED IN THE SHOP. BOLT THREADS MAY BE RECUT AS NECESSARY TO INSURE FIT.

THE COST OF THE GUARDRAIL ANCHOR ASSEMBLY FOR CULVERTS COMPLETE IN PLACE, SHALL BE INCLUDED IN THE UNIT CONTRACT PRICE BID FOR CLASS "A" CONCRETE.

FERRULES TO BE PLUGGED DURING POURING OF SLAB AS RECOMMENDED BY THE MANUFACTURER.

AT THE CONTRACTOR'S OPTION, FERRULES WITH OPEN OR CLOSED ENDS MAY BE USED.

PAYMENT FOR GUARDRAIL, POSTS, AND POST BASE PLATES IS INCLUDED IN ROADWAY PAY ITEMS.

SLAB REINFORCING STEEL MAY BE SHIFTED AS NECESSARY TO CLEAR GUARDRAIL ANCHOR ASSEMBLY. CARE SHOULD BE TAKEN TO KEEP THE SHIFTING OF REINFORCING STEEL TO A MINIMUM.

THE CONTRACTOR MAY USE ADHESIVELY ANCHORED ANCHOR BOLTS IN PLACE OF GUARDRAIL ANCHOR ASSEMBLY. LEVEL TWO FIELD TESTING IS REQUIRED, AND THE YIELD LOAD OF THE 1″Ø BOLT IS 21.8 KIPS. FOR ADHESIVELY ANCHORED ANCHOR BOLTS OR DOWELS, SEE STANDARD SPECIFICATIONS.

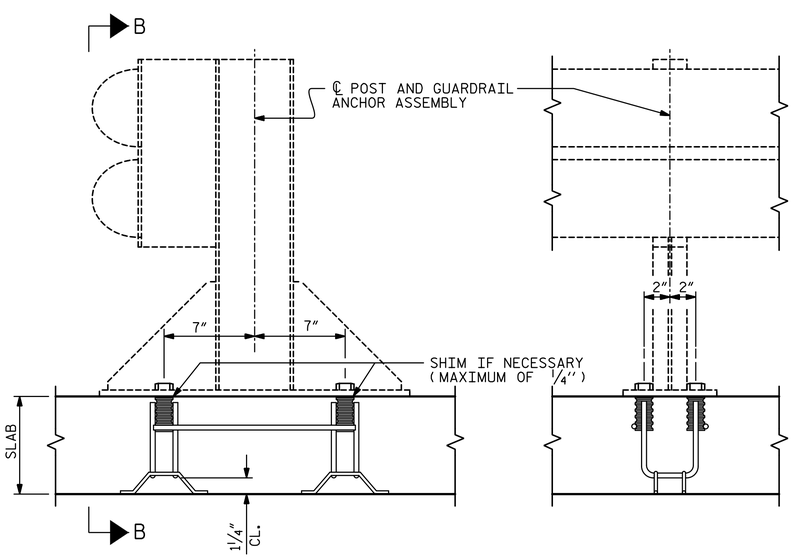

SECTION A-A

SECTION B-B

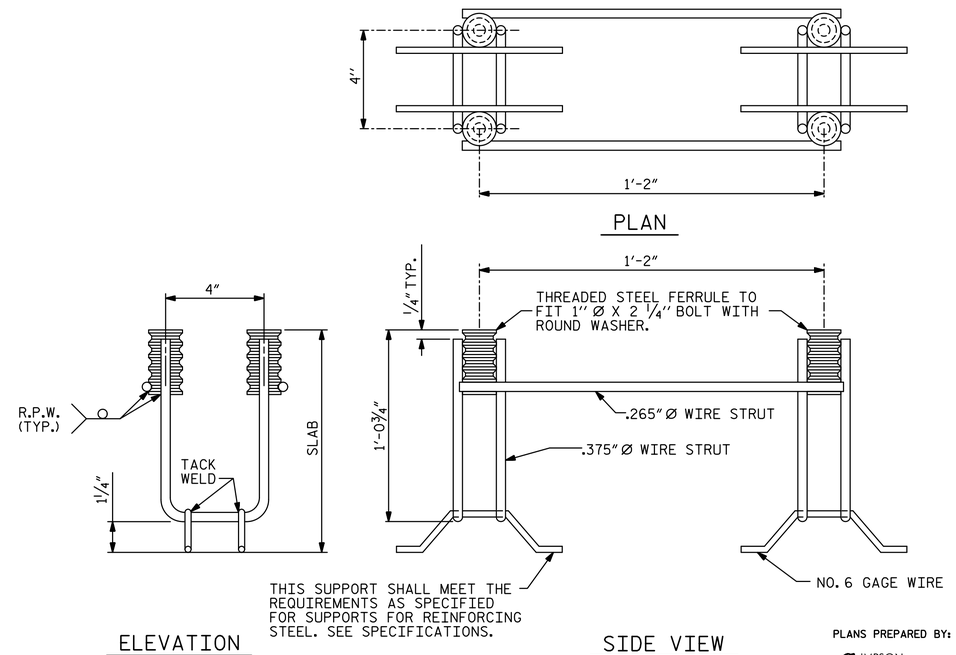

PLAN

ELEVATION

SIDE VIEW

GUARDRAIL ANCHOR ASSEMBLY FOR CULVERTS

PROJECT NO. 17BP.5.R.51

WAKE COUNTY

STATION: 15+68.00 -L-

SHEET 5 OF 6

STATE OF NORTH CAROLINA
DEPARTMENT OF TRANSPORTATION
RALEIGH

ANCHORAGE DETAILS FOR GUARDRAIL ANCHOR ASSEMBLY FOR CULVERTS

PLANS PREPARED BY:
SIMPSON ENGINEERS & ASSOCIATES
5640 Dillard Drive
Suite 200
Cary, NC 27518
(919) 852-0468
(919) 852-0598 (Fax)
www.simpsonengr.com
LICENSURE NO. C-2521

NORTH CAROLINA PROFESSIONAL ENGINEER SEAL 18056 JOHN A. BATTS
2/5/2018

DOCUMENT NOT CONSIDERED FINAL UNLESS ALL SIGNATURES COMPLETED

REVISIONS								
NO.	BY:	DATE:	NO.	BY:	DATE:			
1			3					
2			4					

SHEET NO. C-5

TOTAL SHEETS 6

DRAWN BY:	T. BANKOVICH	DATE:	2-18
CHECKED BY:	B.S. COX	DATE:	2-18
DESIGN ENGINEER OF RECORD:	J.A. BATTS	DATE:	2-18

2/5/2018 12:26:31 PM G:\Projects\2014\17BP5R51 (Wake 27)\Structures\Drawings\Final\Wake 27_smu_culvert.dgn