DocuSign Envelope ID: 5E0122B4-0F9C-4453-8F6C-D2890B762C3F

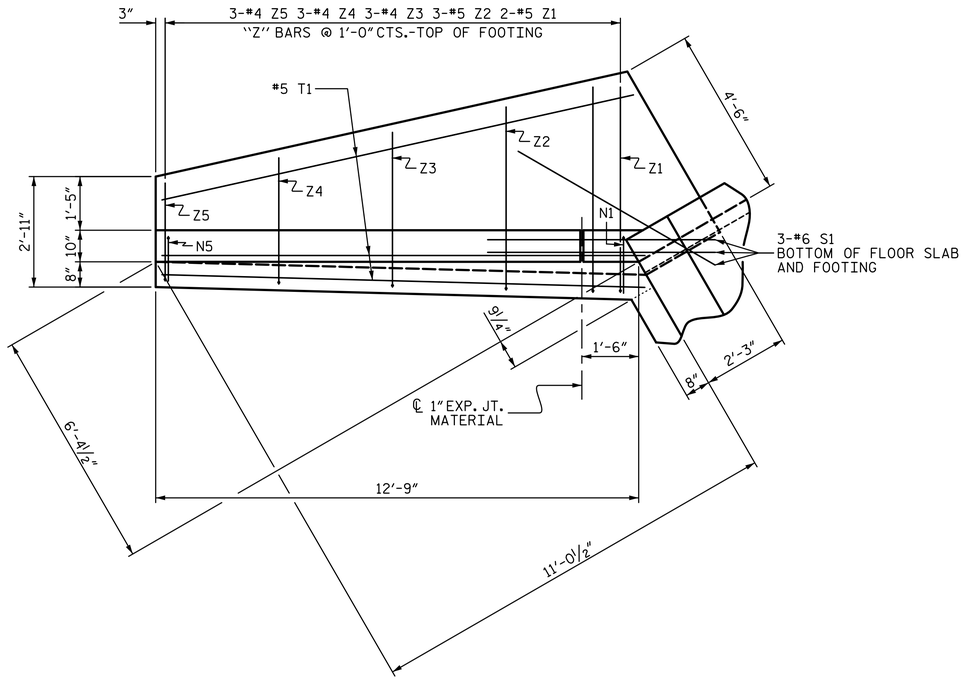

PLAN

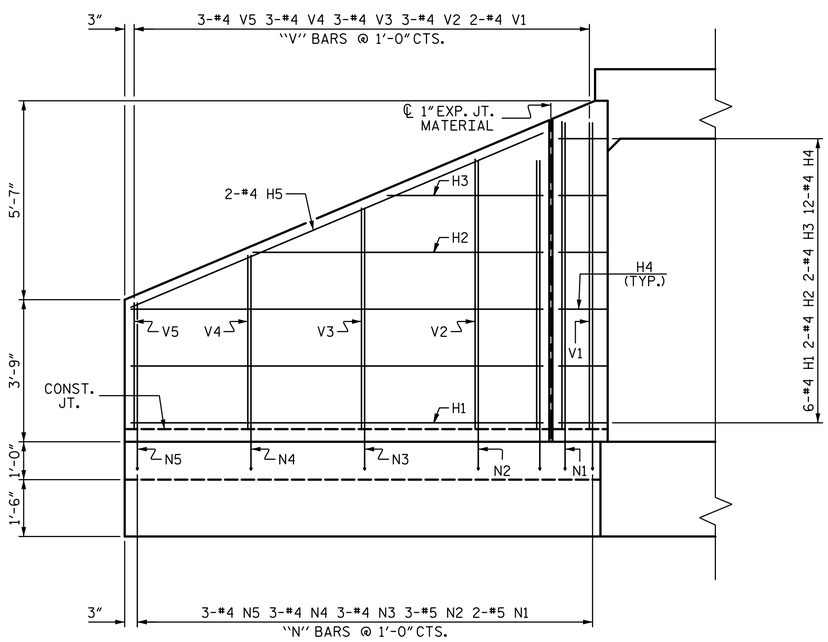

ELEVATION

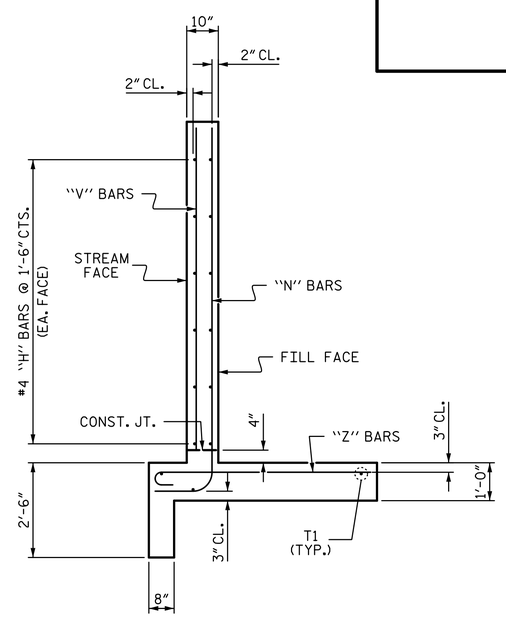

TYPICAL WING SECTION

BAR TYPES

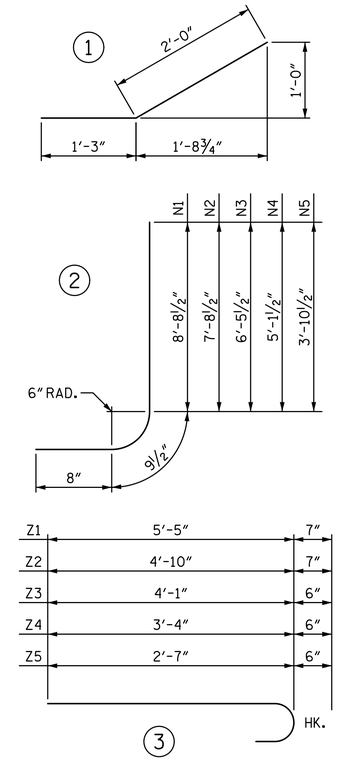

ALL BAR DIMENSIONS ARE OUT TO OUT

BILL OF MATERIAL

BAR	NO.	SIZE	TYPE	LENGTH	WEIGHT
H1	24	4	STR	10'-10"	174
H2	8	4	STR	7'-8"	41
H3	8	4	STR	4'-1"	22
H4	48	4	1	3'-3"	104
H5	8	4	STR	11'-9"	63
N1	8	5	2	10'-2"	85
N2	12	5	2	9'-2"	115
N3	12	4	2	7'-11"	63
N4	12	4	2	6'-7"	53
N5	12	4	2	5'-4"	43
S1	12	6	STR	6'-0"	108
T1	12	5	STR	12'-9"	160
V1	8	4	STR	8'-1"	43
V2	12	4	STR	7'-1"	57
V3	12	4	STR	5'-10"	47
V4	12	4	STR	4'-7"	37
V5	12	4	STR	3'-4"	27
Z1	8	5	3	6'-0"	50
Z2	12	5	3	5'-5"	68
Z3	12	4	3	4'-7"	37
Z4	12	4	3	3'-10"	31
Z5	12	4	3	3'-1"	25
REINFORCING STEEL FOR 4 WINGS					1453 LB
CLASS "A" CONCRETE					
4 WINGS					21.4 CY
2 END CURTAIN WALLS					2.4 CY
TOTAL					23.8 CY

PROJECT NO. 17BP.5.R.51

WAKE COUNTY

STATION: 15+68.00 -L-

SHEET 4 OF 6

STATE OF NORTH CAROLINA
DEPARTMENT OF TRANSPORTATION
RALEIGH

WINGS FOR CONCRETE BOX CULVERT

H = 8'-0" SLOPE 2:1

90° SKEW

PLANS PREPARED BY:

SIMPSON ENGINEERS & ASSOCIATES
5640 Dillard Drive
Suite 200
Cary, NC 27518
(919) 852-0468
(919) 852-0598 (Fax)
www.simpsonengr.com
LICENSURE NO. C-2521

NORTH CAROLINA PROFESSIONAL SEAL 18056 ENGINEER JOHN A. BATTS
2/5/2018

DOCUMENT NOT CONSIDERED FINAL UNLESS ALL SIGNATURES COMPLETED

REVISIONS							
NO.	BY:	DATE:	NO.	BY:	DATE:	SHEET NO.	C-4
1			3			TOTAL SHEETS	6
2			4				

DRAWN BY:	T. BANKOVICH	DATE:	2-18
CHECKED BY:	B.S. COX	DATE:	2-18
DESIGN ENGINEER OF RECORD:	J.A. BATTS	DATE:	2-18

2/5/2018 12:26:31 PM G:\Projects\2014\17BP5R51 (Wake 27)\Structures\Drawings\Final\Wake 27_smu_culvert.dgn