DocuSign Envelope ID: 5E0122B4-0F9C-4453-8F6C-D2890B762C3F

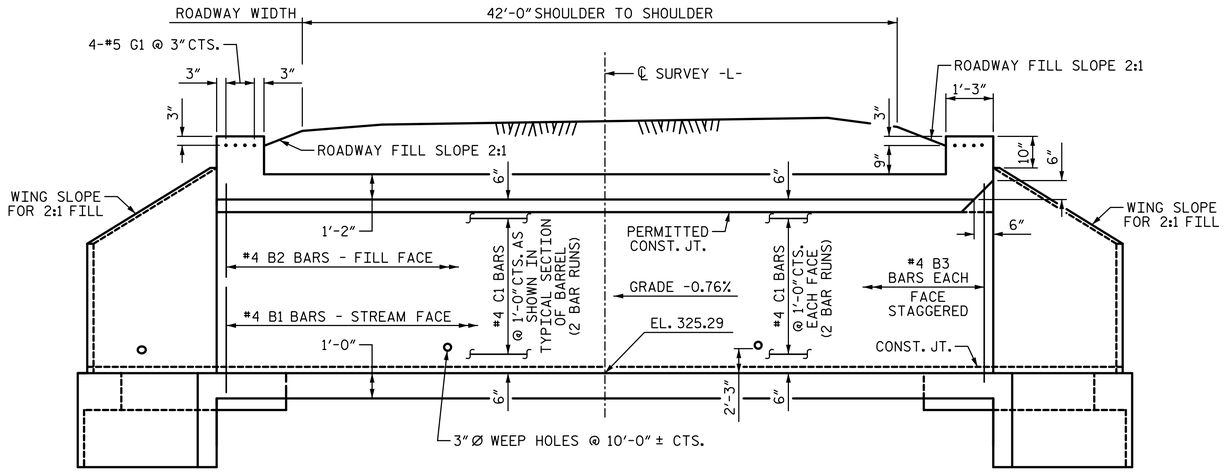

CULVERT SECTION NORMAL TO ROADWAY

(CONCRETE SILLS NOT SHOWN)

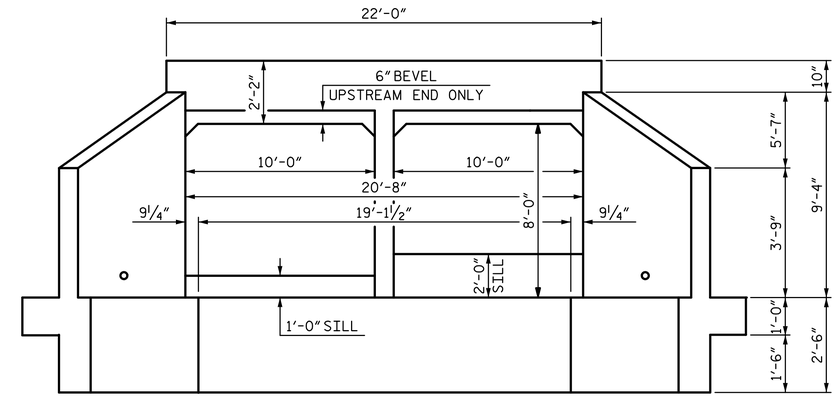

END ELEVATION - LOOKING DOWNSTREAM

(UPSTREAM END SHOWN, DOWNSTREAM END SIMILAR)

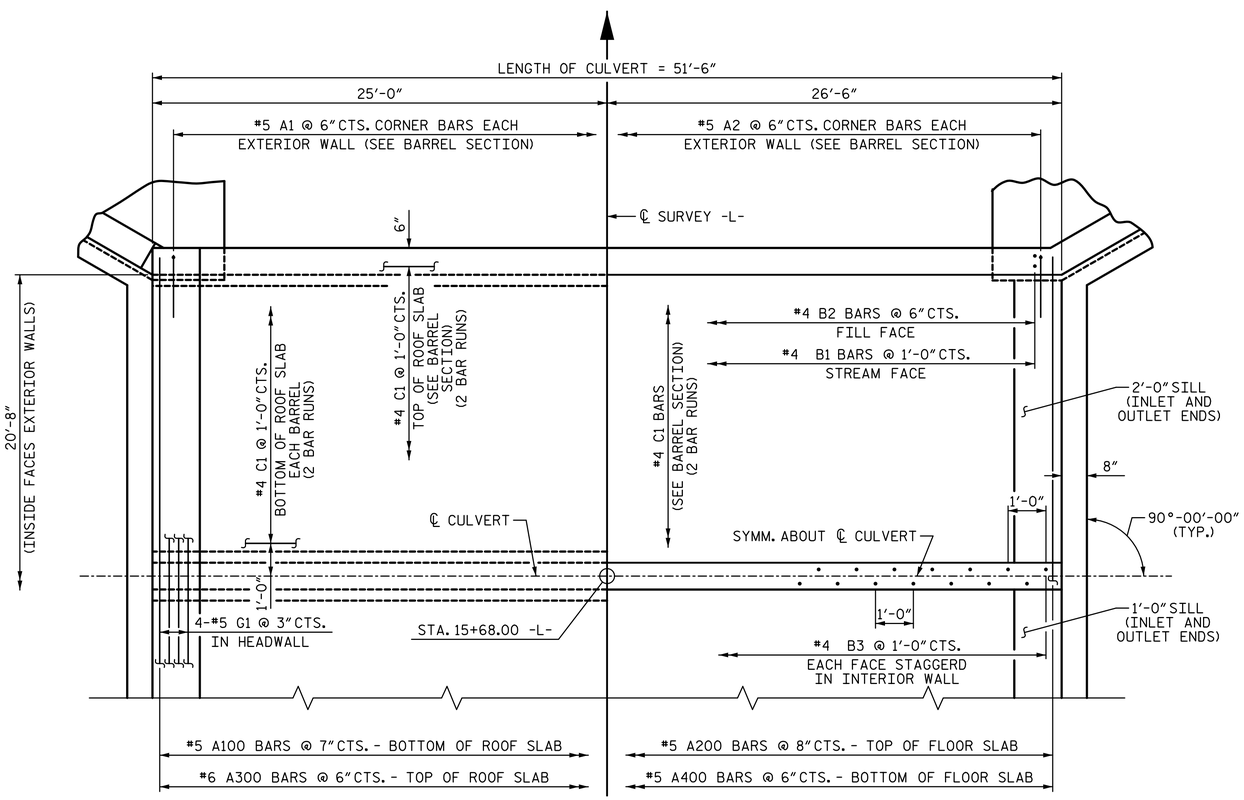

PART PLAN - ROOF SLAB

PART PLAN - FLOOR SLAB

PROJECT NO. 17BP.5.R.51

WAKE COUNTY

STATION: 15+68.00 -L-

SHEET 2 OF 6

STATE OF NORTH CAROLINA
DEPARTMENT OF TRANSPORTATION
RALEIGH

DOUBLE 10 FT. X 8 FT. CONCRETE BOX CULVERT 90° SKEW

PLANS PREPARED BY:

SIMPSON ENGINEERS & ASSOCIATES
5640 Dillard Drive
Suite 200
Cary, NC 27518
(919) 852-0468
(919) 852-0598 (Fax)
www.simpsonengr.com
LICENSURE NO. C-2521

NORTH CAROLINA PROFESSIONAL SEAL ENGINEER JOHN A. BATTS 18056
2/5/2018

DOCUMENT NOT CONSIDERED FINAL UNLESS ALL SIGNATURES COMPLETED

REVISIONS						
NO.	BY:	DATE:	NO.	BY:	DATE:	
1			3			
2			4			

SHEET NO. C-2

TOTAL SHEETS 6

DRAWN BY: T. BANKOVICH DATE: 2-18
CHECKED BY: B.S. COX DATE: 2-18
DESIGN ENGINEER OF RECORD: J.A. BATTS DATE: 2-18

2/5/2018 12:26:30 PM G:\Projects\2014\17BP5R51 (Wake 27)\Structures\Drawings\Final\Wake 27_smu_culvert.dgn